PARTIAL ENGINE ASSY (1CD–FTV)

COMPONENTS

140L3–01

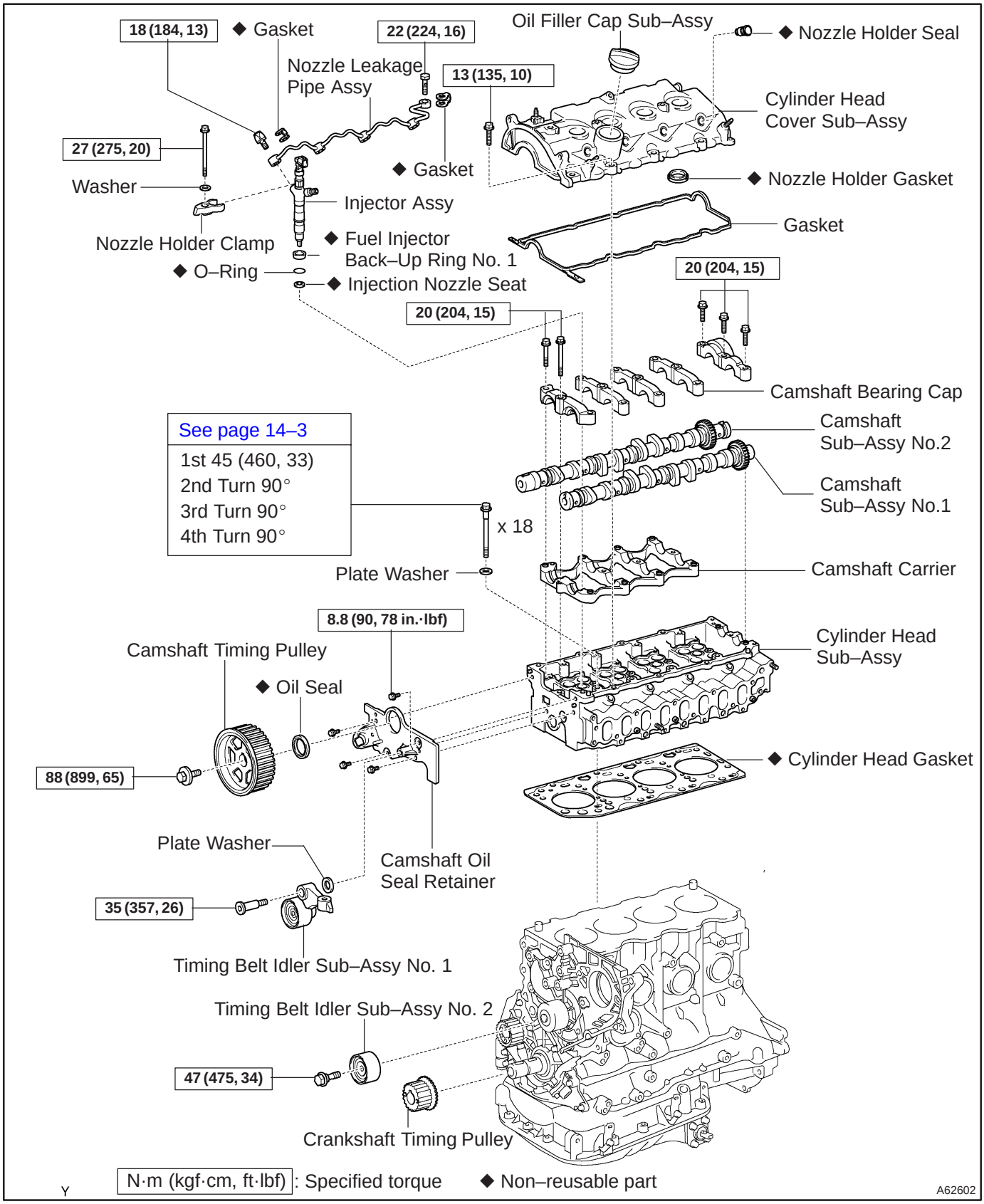

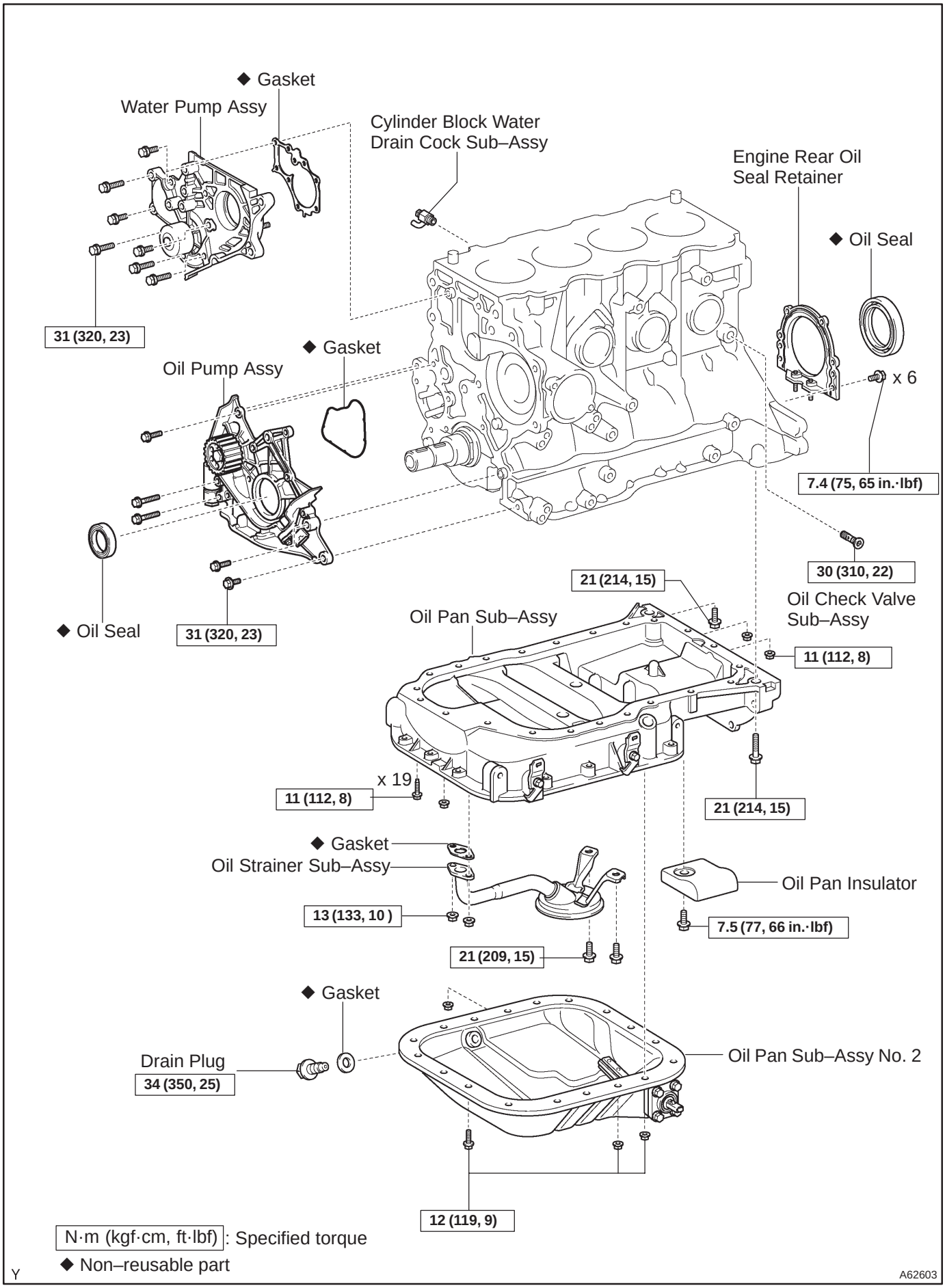
◆ Gasket
Water Pump Assy
Cylinder Block Water
Drain Cock Sub–Assy
Engine Rear Oil
Seal Retainer
◆ Oil Seal
31 (320, 23)
◆ Gasket
Oil Pump Assy
x 6
7.4 (75, 65 in.·lbf)
30 (310, 22)
21 (214, 15)
Oil Check Valve
Sub–Assy
Oil Pan Sub–Assy
◆ Oil Seal
31 (320, 23)
11 (112, 8)
x 19
11 (112, 8)
21 (214, 15)
◆ Gasket
Oil Strainer Sub–Assy
Oil Pan Insulator
13 (133, 10)
7.5 (77, 66 in.·lbf)
21 (209, 15)
◆ Gasket
Drain Plug
34 (350, 25)
Oil Pan Sub–Assy No. 2
12 (119, 9)
N·m (kgf·cm, ft·lbf): Specified torque
◆ Non–reusable part
Y
A62603